REVISIONS			
REV.	DESCRIPTION	DATE	APPROVED
-	INITIAL RELEASE	11/21/2018	DL
1	ADDED SHEET 2 PCB DEFINITION	2/20/2019	PV
2	UPD PCB (COMMON SL AND CPW)	5/13/2019	PV
3	CHANGED PN, WAS: TMB-V8F2-1L1	1/9/2020	PV

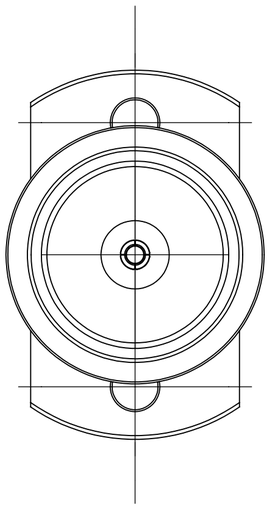

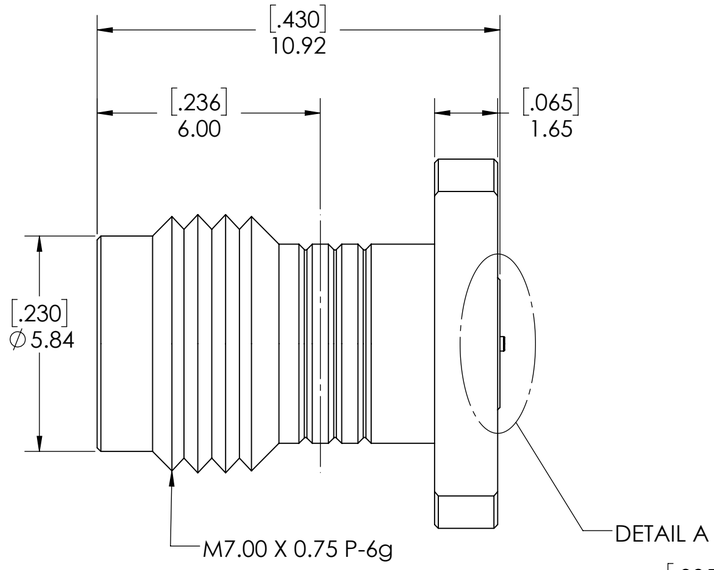

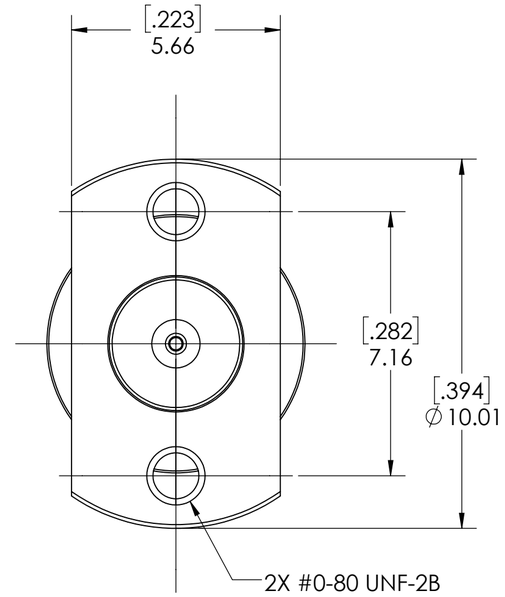

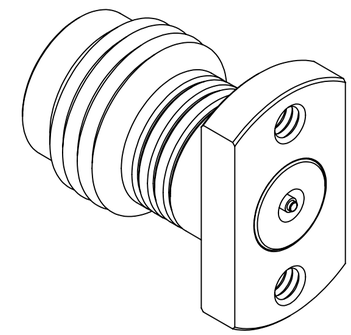

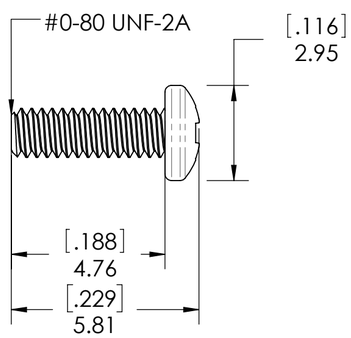

SCREW

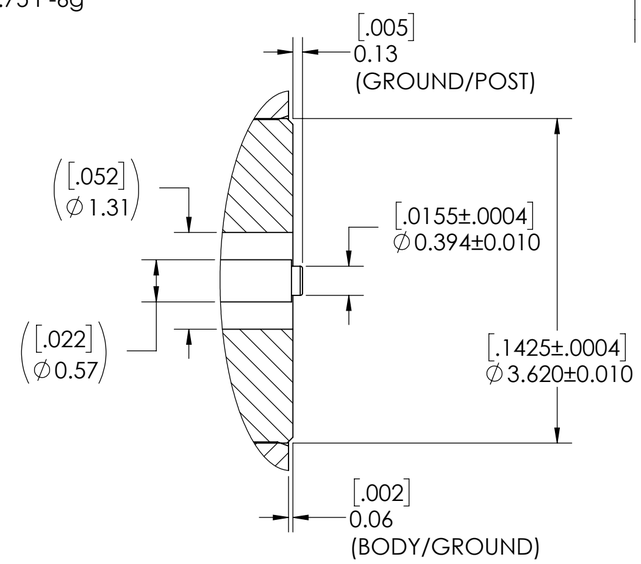

DETAIL A
SCALE 16:1

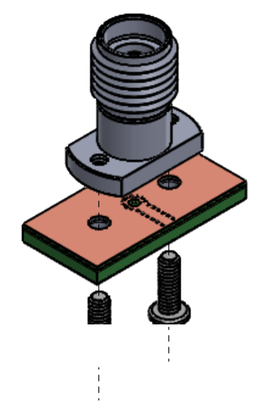

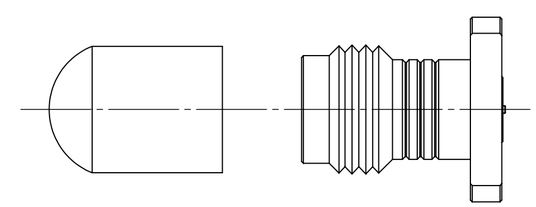

PROTECTION CAP

NOTE(S):
1. These characteristics are typical and for reference.
2. 4V99981010
3. DYH: 59-20004-44050C
4. See sheet 2 for PCB interface definition.

MATERIAL(S):

Body:
Stainless Steel
Center Conductor:
Beryllium Copper
Insulator:
PCTFE, white
RoHS Compliant
Protective Cap:
Soft PVC
Color: Green

ELECTRICAL(S):

Impedence: 50 Ohms Nominal
Frequency Range: DC to 67 GHz
VSWR: 1.30 max at 67 GHz
Working Voltage: 500 V RMS max @ Sea Level
Dielectric Withstand Voltage: 500 V RMS max.
Insulation Resistance: 5000 megaohms min.
Contact Resistance:
Initial:
Center Contact: 3 Milliohms max
Outer Contact: 2.5 Milliohms max
Insertion Loss: <0.49 db @ 67 GHz

MECHANICAL(S):

Mating Characteristics:
Interface per MIL-STD-348
Force to Engage & Disengage:
Torque: 2 inch-pounds max
Longitudinal Force: NA
Connector Durability:
500 Cycles min.
Permeability: Less than 2.0 mu.
Center Contact Retention:
Axial Force: 6 pounds min.
Radial Force: NA

ENVIRONMENTAL(S):

Temperature Range: -55°C to +85°C
Moisture Resistance:
MIL-STD-202, Method 103, Test Condition B
Corrosion:
MIL-STD-202, Method 101, Test Condition B
Vibration:
MIL-STD-202, Method 204, Test Condition A
Shock:
MIL-STD-202, Method 213, Test Condition 1

FINISH(ES):

Body:
Passivated
Center Conductor:
Gold Plating

APPLICABLE CARLISLE IT DOCUMENTS

WORK STANDARD	PROD INSTRUC	ASSY INSTRUC
NA	NA	NA
-		

NOTICE
THIS DRAWING EMBODIES A CONFIDENTIAL PROPRIETARY DESIGN ORIGINATED BY CARLISLE INTERCONNECT TECHNOLOGIES & ALL DESIGN, MANUFACTURING, REPRODUCTION, USE & SALE RIGHTS REGARDING THE SAME ARE EXPRESSLY RESERVED. IT IS SUBMITTED UNDER A CONFIDENTIAL RELATIONSHIP FOR A SPECIFIED PURPOSE & THE RECIPIENT AGREES BY ACCEPTING THIS DRAWING NOT SUPPLY OR DISCLOSE ANY INFORMATION REGARDING IT TO ANY UNAUTHORIZED PERSON TO INCORPORATE IN OTHER PROJECTS ANY SPECIAL FEATURES PECULIAR TO THIS DESIGN. ALL PATENT RIGHTS HERETO ARE EXPRESSLY RESERVED BY CARLISLE INTERCONNECT TECHNOLOGIES, CERRITOS, CALIFORNIA 90703.

TOLERANCES AND NOTES
EXCEPT AS NOTED

THIRD ANGLE PROJECTION
SCALE 8:1
DIMENSIONS ARE IN [INCHES] MM
ANGLES ±2°
.XX DECIMALS ±.063
.XXX DECIMALS ±.01

APPROVAL	INITIALS	DATE
DRAWN BY	DL	11/21/2018
CHECKED BY	KM	11/21/2018
DESIGN ENG		
APPR BY		

CARLISLE INTERCONNECT TECHNOLOGIES
Dongguan City, Guangdong P.R. China 523533

TITLE: 1.85mm FEMALE 2 HOLE FLANGE POST CONTACT

SCALE: 8:1 | SUB-DIRECTORY/ _OUTLINE/ | SHEET 1 OF 2

SIZE: C | DRAWING NO. 3 TMB-V8F2-3L1 | REV. 3

ENG-SW REV. E

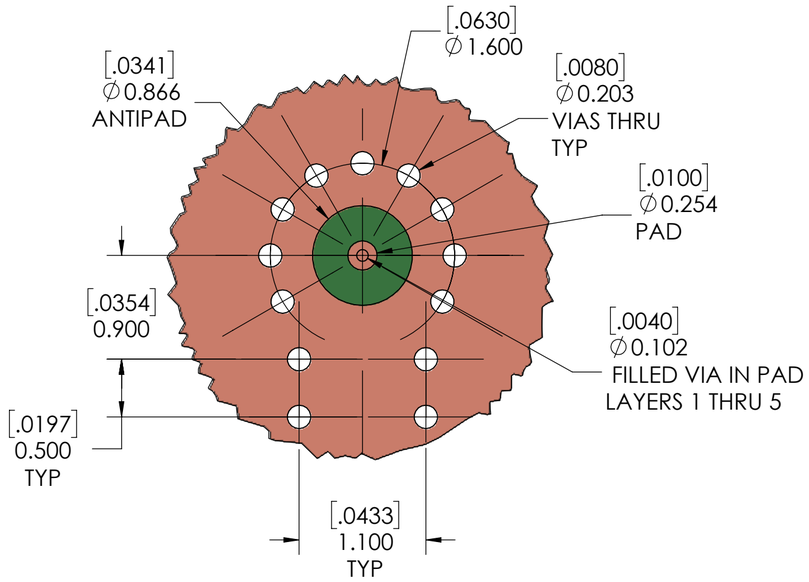

DETAIL B
SCALE 25 : 1
LAYER 1 (Cu)
△2

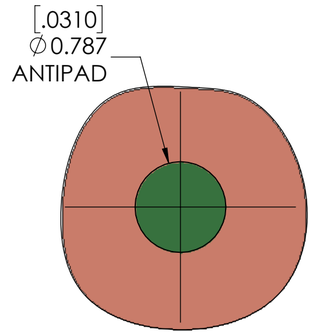

DETAIL B
SCALE 25:1
LAYER 3 (Cu)
VIAS NOT SHOWN FOR CLARITY

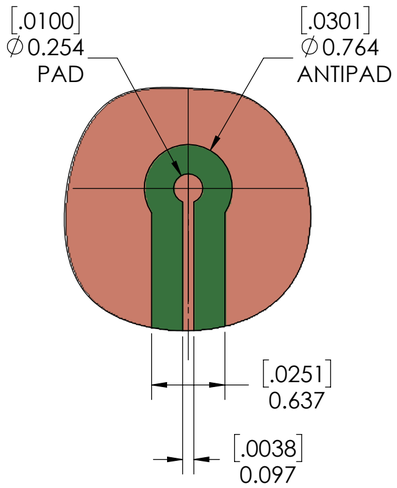

DETAIL B
SCALE 25:1
LAYER 5 (Cu)
VIAS NOT SHOWN FOR CLARITY

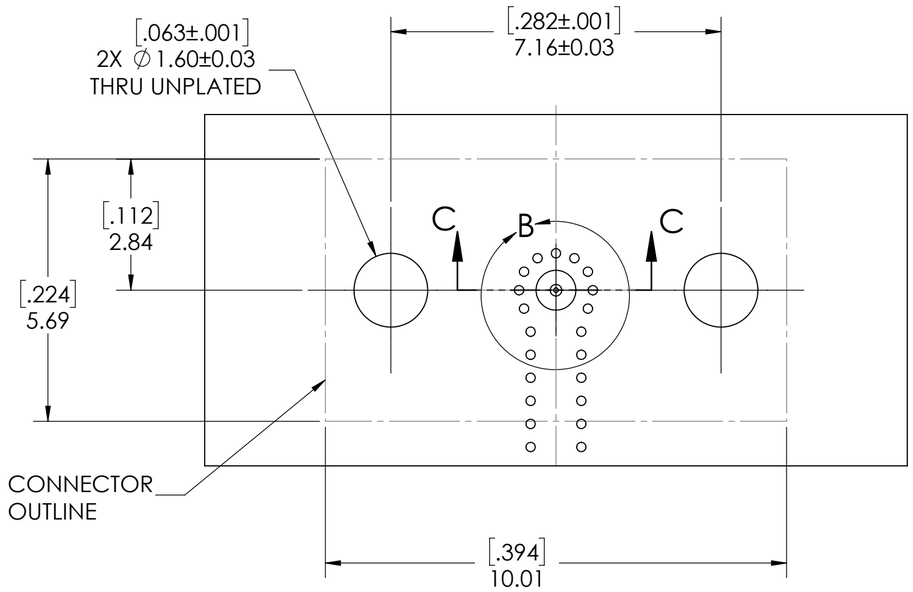

PCB LAYOUT
(FOR REFERENCE ONLY)

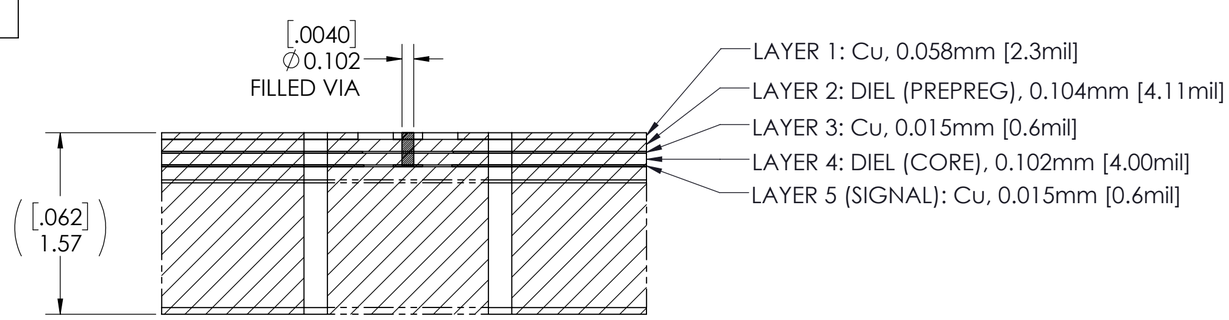

SECTION C-C
SCALE 25 : 1
PCB LAYER DEFINITION
△2

SCALE	SUB-DIRECTORY/		SHEET 2 OF 2
10:1			
SIZE	CAGE CODE	DRAWING NO.	REV.
C		TMB-V8F2-3L1	3

ENG-SW REV. E