This print and associated documents and the contained information are the confidential property of ELECTRONIC CABLE SPECIALISTS. Disclosure of, and/or reproduction of, all or part thereof or manufacture of any part from information contained on this print not specifically permitted by ELECTRONIC CABLE SPECIALISTS in writing is forbidden.

DWG NO.	SH	REV
ECS-202008	1	N/C

REVISION HISTORY

ECN	SHT	ZONE	REV	DESCRIPTION	DATE	APPROVED
			X	RELEASED FOR CUSTOMER APPROVAL	6/20/03	PJJ
			X1	DIM .70 MAX. WAS 1.06	7/03/03	B MATHUR
17805			N/C	RELEASED FOR 1ST ARTICLE MFG.	7/23/03	B. Mathur

NOTES: UNLESS OTHERWISE SPECIFIED

GENERAL NOTES:

1. DIMENSIONS AND TOLERANCES PER ASME Y14.5M-1994.
2. DESIGNED TO MEET THE APPLICABLE REQUIREMENTS OF THE FOLLOWING:
   A. ARINC 600-13: 4 MCU
   B. RTCA/DO-160D ENVIRONMENTAL TEST CONDITIONS:
      1. TEMPERATURE: CAT A2
      2. ALTITUDE: CAT A2
      3. TEMPERATURE VARIATION RATE: CAT B
      4. HUMIDITY: CAT A
      5. OPERATIONAL SHOCK: CAT B
      6. CRASH SAFETY: SUSTAINED, TABLE 7-1, FIXED WING TRANSPORT A/C, FIXED ORIENTATION
      7. VIBRATION: CAT S, CURVE B2
3. TRAY, CONNECTOR PLATE, AND PLENUM FINISH: CLEAR CHEM FILM PER MIL-C-5541, CLASS 3.
4. ELECTRICAL SPECIFICATIONS (FAN):
   A. 28-32 VDC
   B. 0.25 AMPS

INSTALLATION NOTES:

5. REMOVE METERING PLUGS FROM TRAY PRIOR TO INSTALLING LRU.
6. NOT RECOMMENDED FOR INSTALLATION IN UNPRESSURIZED AREAS. FOR PRESSURIZED APPLICATION ONLY.

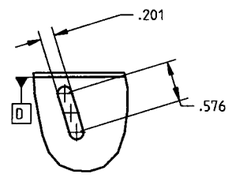

DETAIL A
SCALE 1/1
2 PLACES

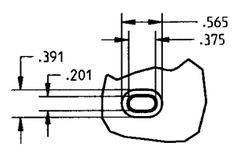

DETAIL B
SCALE 1/1

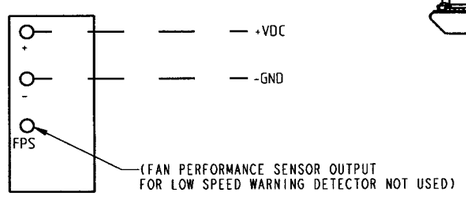

FAN WIRING SCHEMATIC

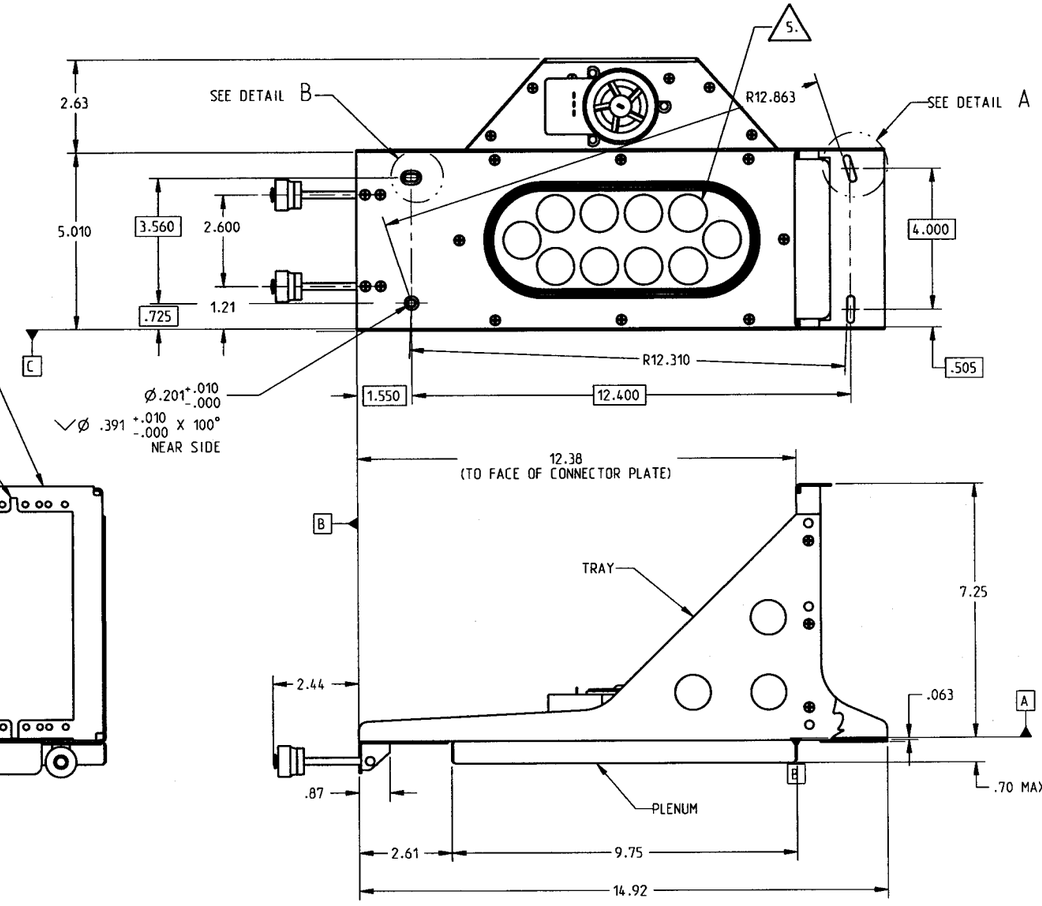

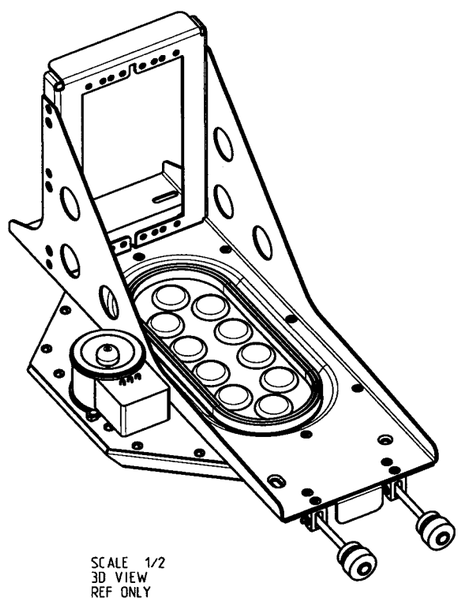

SCALE 1/2
3D VIEW
REF ONLY

ECS PART NO: 200-92609-101

PRODUCT SPECIFICATION DRAWING

THIRD ANGLE PROJECTION

CAD GENERATED DOCUMENT
ANY CHANGES TO THIS DOCUMENT MUST BE SUBMITTED TO THE DESIGN/DRAFTING DEPARTMENT FOR PROPER UPDATE

QTY REQ'D	FINAL/ NEXT DRAWING	PROJECT NO.
-	-	-
-	-	-
-	-	-
-	-	-
-	FINAL	030002M

APPLICATION

WEIGHTS	-
STRESS	-
-	-
-	-
PRODUCTION	-
QUALITY ASSURANCE	-
-	-

ADDITIONAL APPROVALS — DATE

UNLESS OTHERWISE SPECIFIED DIMENSIONS ARE IN INCHES
TOLERANCES ARE:
FRACTIONS ± - - DECIMALS .XX ± 0.03 .XXX ± 0.010 ANGULAR .X ± 0.5 - -
DO NOT SCALE DRAWING

TREATMENT

FINISH

SIMILAR TO — ACT WT — CALC WT

CONTRACT NO.	-	
DRAWN	TREFFEISEN	19-Jun-03
CHECKED	B. MATHUR	6/20/03
DESIGNED	TREFFEISEN	6/19/03
PROJECT ENGINEER	B. Mathur	7/23/03
MANUFACTURING		7/24/03
ENGINEERING	B. Mathur	7/23/03

ELECTRONIC CABLE SPECIALISTS
FRANKLIN, WI 53132
PHONE: (414) 421-5300

TITLE: TRAY ASSEMBLY, S/S, W/ LEFT SIDE FAN, 4MCU

SIZE	CAGE CODE	LEVEL	DWG NO.
D	66197	C	ECS-202008

SCALE 1/2 — EFFECTIVITY: - — SHEET 1 OF 1