REVISION			
REV.	DESCRIPTION	DATE	BY
P1	PRELIMINARY RELEASE	08/18/16	HT

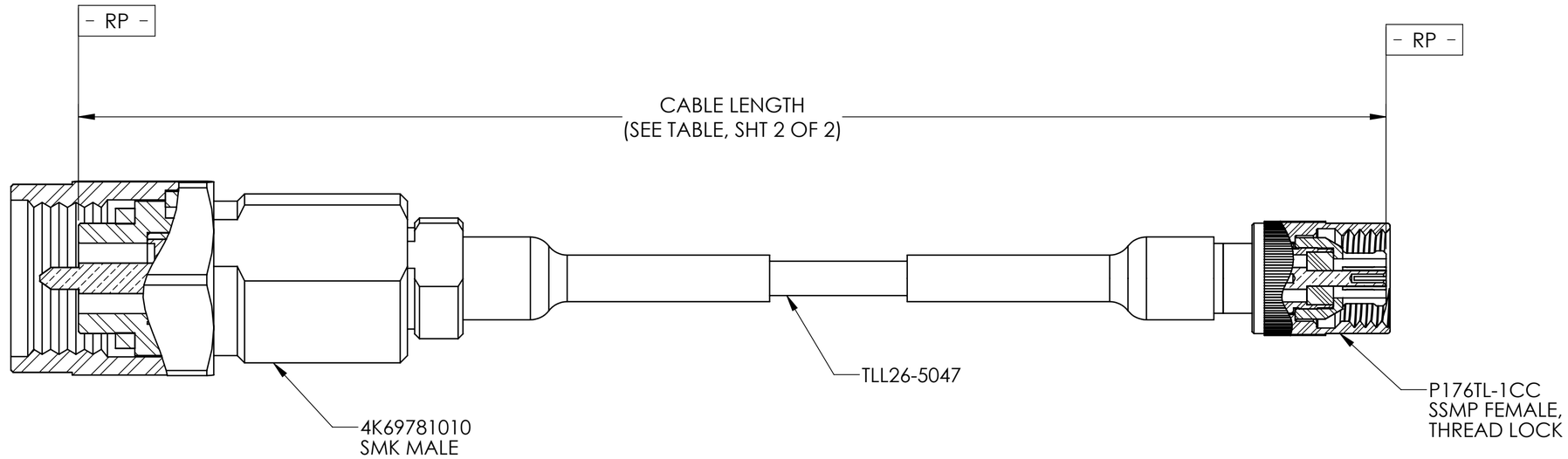

MATERIAL(S):

SMK connector:
Body, Inner Body,Rear Sleeve & Coupling Nut:
303 sst per ASTM A-582
C-ring : 304 sst
Pin:
BeCu Alloy C17300 per ASTM B-196 OR B-197
Bullet & Cable Body:
Brass Alloy C3604B
Gasket:
Silicone, Red.
Insulator:
Ultem-1000/PTCFE
SSMP connector:
Coupling Nut:
303 sst per ASTM A-582
Housing & Center Conductor:
BeCu Alloy per ASTM B-196
Housing Sleeve & Cable Sleeve:
Brass per ASTM B-16, Condition H02
Insulator & Dielectric:
PTFE Teflon per ASTM D-1710

Cable:
TLL26-5047

ELECTRICAL(S):

Impedance: 50 Ohms Nominal
Frequency Range: DC to 40 GHz
VSWR: See Table, Sheet 2 OF 2
Insertion Loss: See Table, Sheet 2 OF 2
Insulation Resistance: >= 5 GigaOhms
Contact Resistance:
Center: <= 6 MilliOhms
Outer: <= 2 MilliOhms
Working Voltage: 325 Vrms @ Sea Level
125 Vrms @ 70000 feet
Dielectric Withstand Voltage: 500 Vrms min

MECHANICAL(S):

Mating Characteristics:
SMK (2.92mm) Interface per MIL-STD-348
SSMP Interface per CarlisleIT
Connector Durability, SMK and SSMP:
500 Cycles
Center Contact Retention (individual):
Axial (min): SSMP 2lb; SMK: 6lb
Radial: N/A
Force to Engage (individual):
SSMP: 2.5 lb max
SMK: 2 in-lb max
Force to Disengage (individual):
SSMP: 1.5 lb max
Coupling Proof Torque:
SMK: 15 in-lb

ENVIRONMENTAL(S):

Temperature Range: -65°C to +165°C
Thermal Shock:
MIL-STD-202, Method 107, Test Condition B
Moisture Resistance:
MIL-STD-202, Method 106, Insulation resistance at least 200 MegaOhms within 5 minutes after removal from humidity.
Vibration:
MIL-STD-202, Method 204, Test Condition A, except 5g Peak
Shock:
MIL-STD-202, Method 213, Test Condition I, except 10g Peak
Corrosion:
MIL-STD-202, Method 101, Test Condition B

FINISH(ES):

SMK Bullet, SMP Coupling Nut, SMP Housing, SMP Housing Sleeve, Cable Sleeve & Center Conductors:
Gold plate per ASTM B-488 over Nickel underplate per SAE AMS-QQ-N-290.

For SMK (Body, Inner Body, Rear Sleeve & Coupling Nuts):
Passivate per SAE AMS-2700 or per ASTM A-967, Nitric 1.

APPLICABLE CARLISLE IT DOCUMENTS

WORK STANDARD	PROD INSTRUC	ASSY INSTRUC
NA	NA	NA
-		

NOTICE
THIS DRAWING EMBODIES A CONFIDENTIAL PROPRIETARY DESIGN ORIGINATED BY CARLISLE INTERCONNECT TECHNOLOGIES & ALL DESIGN, MANUFACTURING, REPRODUCTION, USE & SALE RIGHTS REGARDING THE SAME ARE EXPRESSLY RESERVED. IT IS SUBMITTED UNDER A CONFIDENTIAL RELATIONSHIP FOR A SPECIFIED PURPOSE & THE RECIPIENT AGREES BY ACCEPTING THIS DRAWING NOT SUPPLY OR DISCLOSE ANY INFORMATION REGARDING IT TO ANY UNAUTHORIZED PERSON TO INCORPORATE IN OTHER PROJECTS ANY SPECIAL FEATURES PECULIAR TO THIS DESIGN. ALL PATENT RIGHTS HERETO ARE EXPRESSLY RESERVED BY CARLISLE INTERCONNECT TECHNOLOGIES, CERRITOS, CALIFORNIA 90703.

TOLERANCES AND NOTES
EXCEPT AS NOTED
DIMENSIONS ARE IN INCHES.
LINEAR .XX ±.015 .XXX ±.005 ANGULAR ± 1/2°
FRACTION ± 1/32
1. MACHINE FINISH: 63 RMS
2. BREAK ALL SHARP EDGES .003 MAX.
3. MACHINED FILLETS .005 MAX.
4. MACHINED SURFACES SQUARE TO RESPECTIVE AXIS WITHIN .005 INCHES PER INCH.
5. MACHINED DIAMETERS CONCENTRIC WITHIN .002 T.I.R.
6. DIMENSIONS TO BE MET BEFORE PLATING.
7. CHAMFER ALL THREADS 45°.
8. THREADS PER H-28
9. REMOVE FRAYED EDGES ON TEFLON.
10. REMOVE ALL BURRS.

MATERIAL		
APPROVAL	INITIALS	DATE
DRAWN BY	HT	08/18/16
CHECKED BY	-	-
TEST ENGR	-	-
QUALITY	-	-
DESIGN ENG	H.T.	08/18/16
MFG. ENGR	-	-
ECO APPRV	-	-

SPECIFICATION	PROCUREMENT
-	-

CARLISLE Interconnect Technologies
Cerritos, CA 90703

TITLE SMK (2.92 mm) MALE TO SSMP FEMALE, THREAD LOCK, TO TLL26-5047 FLEX CABLE

SCALE	SUB-DIRECTORY/	SHEET 1 OF 2
6:1	_OL/	

SIZE	CAGE CODE	DRAWING NO.	REV.
C	30990	1K6S10474200	P1

ENG-SW REV. E

PART NUMBER	LENGTH INCHES	MAX VSWR :1 @ 40 GHz (Gated)	MAX INSERTION LOSS [dB] @ 40 GHz (Gated)
1-K6S1-047-4200	**CABLE ASSEMBLY BUCKET PHANTOM**		
1-K6S1-047-4204	4.00	1.50	1.44
1-K6S1-047-4206	6.00	1.50	1.88
1-K6S1-047-4208	8.00	1.50	2.31
1-K6S1-047-4210	10.00	1.50	2.75
1-K6S1-047-4212	12.00	1.50	3.19
1-K6S1-047-4214	14.00	1.50	3.63
1-K6S1-047-4216	16.00	1.50	4.07
1-K6S1-047-4218	18.00	1.50	4.50
1-K6S1-047-4220	20.00	1.50	4.94
1-K6S1-047-4222	22.00	1.50	5.38
1-K6S1-047-4224	24.00	1.50	5.82
1-K6S1-047-4226	26.00	1.50	6.25
1-K6S1-047-4228	28.00	1.50	6.69
1-K6S1-047-4230	30.00	1.50	7.13
1-K6S1-047-4232	32.00	1.50	7.57
1-K6S1-047-4234	34.00	1.50	8.01
1-K6S1-047-4236	36.00	1.50	8.44
1-K6S1-047-4238	38.00	1.50	8.88
1-K6S1-047-4240	40.00	1.50	9.32
1-K6S1-047-4242	42.00	1.50	9.76
1-K6S1-047-4244	44.00	1.50	10.20
1-K6S1-047-4246	46.00	1.50	10.63
1-K6S1-047-4248	48.00	1.50	11.07

SCALE	SUB-DIRECTORY/		
6:1	_OUTLINE/	SHEET 2 OF 2	
SIZE	CAGE CODE	DRAWING NO.	REV.
C	30990	1K6S10474200	P1